JEEP

ACCESSORIES







MORryde

HEAVY. DUTY. ADVENTURE.

www.MORryde.com

JEEP MODELS

	JEEP JT 2020-Current	JEEP JL 2018-Current	JEEP JK 2007-2017	JEEP TJ 1997-2006	JEEP YJ 1987-1995
TRAIL KITCHEN	✗	✗	✗	✗	✗
STOREGATE		✗	✗		
OVERHEAD MOLLE PANEL		✗	✗		
TAILGATE REINFORCEMENT		✗	✗	✗	
SPARE TIRE CARRIER		✗	✗		
TAILGATE HINGES		✗	✗	✗	
OFF-ROAD JACK CARRIER		✗	✗	✗	
ROTOPAX CARRIER		✗	✗	✗	
SIDE MOUNTS & TRAYS	✗	✗	✗	✗	✗
AMMO CAN TRAY & GRID			✗		
SPARE TIRE MOUNT & TRAY			✗		
OVERHEAD STORAGE LOCKBOX		✗	✗		

CONTENTS

Spare Tire Carrier ____ 3, 7-8
Heavy-Duty Tailgate Hinges ____ 4, 9-10
Heavy-Duty Tailgate Reinforcement ____ 5-6
Hinge Accessories ____ 11-12
Storegate ____ 13
Overhead MOLLE Panel ____ 14-15
Overhead Storage Lockbox ____ 16-17
Ammo Can Tray & Grid ____ 18
Spare Tire Mount ____ 19
Side Mounts & Trays ____ 20-21
Trail Kitchen ____ 22-24
Trail Kitchen Add-Ons ____ 25-26
Trail Kitchen for Two-Burner Stoves ____ 27

JEEP MODELS

CONTENTS

The Strongest Buildable TAILGATE SYSTEM



JP54-021 – JK Tailgate Reinforcement Kit *(Includes all three parts shown.)*

SPARE TIRE CARRIER

1

MORryde's Heavy-Duty Spare Tire Carrier is just what you'll need to mount an oversized spare. It features a unique design that can accommodate up to a 40" tire and comes with an adjustable third brake light mount.

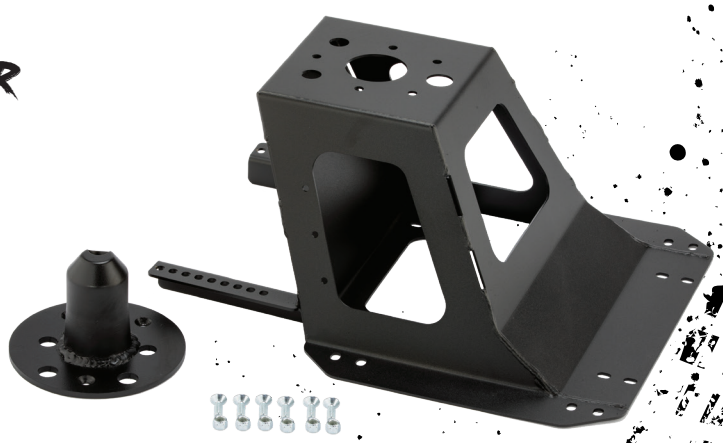

TAILGATE ACCESSORIES



Spare Tire Carrier
(JP54-017)



Off-Road Jack
Hinge Mount
(JP54-010)



Rotopax
Hinge Mount
(JP54-012)

Rock, mud, sand, or stream – no landscape is too rugged for your Jeep Wrangler. But after a few legendary adventures, your factory equipment may not stand up to all that fun. The combination of MORryde's Heavy-Duty Tailgate Hinges, Tailgate Reinforcement, and Spare Tire Carrier offers unparalleled strength and durability. So when your next great adventure calls, you and your Wrangler will both be ready.



2 HEAVY-DUTY TAILGATE HINGES

A substantial upgrade over factory hinges with added strength and hardcore styling. This durable tailgate hinge set makes upgrading your weak factory hinges a simple and painless process.



3 HEAVY-DUTY TAILGATE REINFORCEMENT

Designed to work with MORryde's Heavy-Duty Hinges, the Heavy-Duty Tailgate Reinforcement is ideal for those with oversized spare tires and can hold up the extra weight where your factory equipment will eventually warp and fail.

HEAVY-DUTY TAILGATE REINFORCEMENT

Everyone wants larger, more aggressive tires on their Jeep, but the factory tailgate isn't up to the task of carrying heavier spares. Carrying a heavier spare on the stock tailgate can cause the tailgate welds to break and the hinges to weaken, sag, and rattle. The Heavy-Duty Tailgate Reinforcement eliminates weak points in the factory tailgate and hinge system. No more risk of broken tailgate welds or prematurely worn hinges.



JK Heavy-Duty Tailgate Reinforcement, Heavy-Duty Tailgate Hinges & Off-road Jack Carrier

- Eliminates weak points in the factory tailgate and hinge system
- Retains the factory look of the Jeep
- Compatible with the factory spare carrier up to 33" (or upgrade to the MORryde Heavy-Duty Spare Carrier for even more strength)
- Compatible with the factory bumper or aftermarket bumpers



TJ Heavy-Duty Tailgate Reinforcement & Heavy-Duty Tailgate Hinges

JP54-056	TJ Tailgate Reinforcement
JP54-022	TJ Tailgate Reinforcement w/hinges
JP54-016	JK Tailgate Reinforcement
JP54-077	JL Tailgate Reinforcement



TJ TAILGATE KIT

Purchase the TJ Tailgate Reinforcement and the Heavy-Duty Tailgate Hinges as a kit. JP54-022

JL TAILGATE REINFORCEMENT

HEAVY-DUTY



*JP54-057 are required to assemble this product

- Retains the factory look of the Jeep
- Eliminates weak points in the factory tailgate and hinge system
- Compatible with the factory bumper or aftermarket bumpers
- Compatible only with the Spare Tire Carrier (JP54-078) and Tailgate Hinges (JP54-057)
- Distributes the weight of the tire from tailgate to the tub



JP54-057 Required



JP54-078 Required



JP54-077 JL Tailgate Reinforcement



PRO TIP

Easily attach a Hi-Lift Mount or Rotopax carrier to the JL Hinges using our unique design

TAILGATE REINFORCEMENT



JK SPARE TIRE CARRIER

We understand the need to be the biggest Jeep on the trail. You find it thrilling to tower over those boulders as you hit the rugged terrain. You find it equally satisfying looking down on lesser cars as you drive down the interstate. Your spare tires are big, they are bulky, and they are heavy. The MORryde Spare Tire Carrier is a USA-made heavy-duty set up which gives you peace of mind as you go off on your next adventure.

- Strong, but lightweight
- Two mounting positions: lower position supports most spares up to 37"; and the higher position supports most spares up to 40"
- Accommodates larger tires by raising the spare tire by appx. 1.5" and extending out 1"
- Designed to be used with the MORryde Heavy-Duty Tailgate Reinforcement and can mount directly to the factory tailgate
- Adjustable third brake light stalk works with the factory brake light, adjusts for visibility over 40" tires



JK Spare Tire Carrier and Hinges

JP54-017 JK Spare Tire Carrier

SPARE TIRE CARRIER



JL SPARE TIRE CARRIER

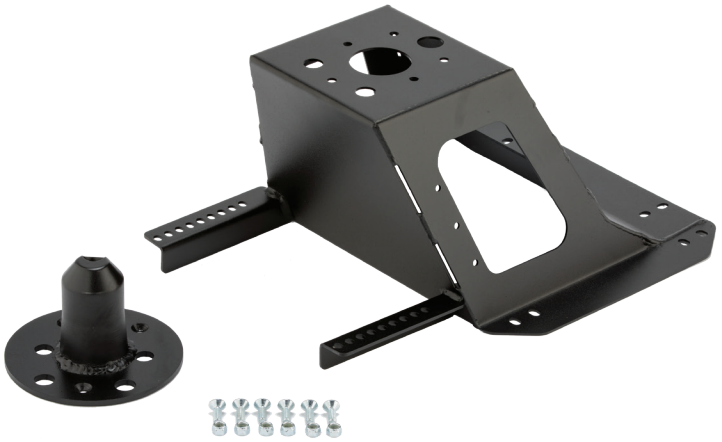

- Strong, but lightweight
- Two mounting positions available
- Works for most spare tires up to 40"
- Accommodates larger tires by raising the spare tire by appx. 1.5" and extending out 1"
- Designed to be used with the HD Tailgate Reinforcement (JP54-077) and HD Tailgate Hinges (JP54-057)
- Includes an adjustable mount for factory third brake light
- Includes built-in mount for stock back-up camera

**JP54-077 and JP54-057 are required to assemble this product*



JP54-057 Required

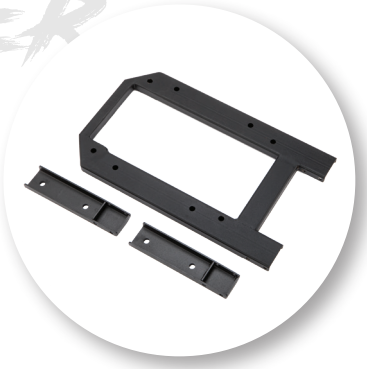

JP54-077 Required



JP54-078 JL Spare Tire Carrier

HEAVY-DUTY TAILGATE HINGES

Vehicle wear-and-tear is bound to happen over time, especially if you like to play hard. At MORryde, we manufacture the replacement accessories that matter most, like our Jeep Tailgate Hinges. When factory hinges begin to wear out, some Jeep enthusiasts might notice a loose tailgate, an annoying rattle, or a sagging rear door that is hard to close. These Heavy-Duty Hinges restore the integrity of the Jeep tailgate.



JL Tailgate Hinges

- Stronger than factory hinges
- Only hinge on the market that is greaseable for long life and smooth operation*
- Mounting points for accessories
- Rebuildable
- Reduces tailgate rattle and sag

** JL Tailgate Hinges are not greaseble.*





TAILGATE HINGES



JK Tailgate Hinges



TJ Tailgate Hinges



JP54-025	TJ Tailgate Hinges
JP54-003	JK Tailgate Hinges
JP54-057	JL Tailgate Hinges

THE ULTIMATE TAILGATE UPGRADE

Pair the Heavy-Duty JK Hinges with MORryde's JK Tailgate Reinforcement & Heavy-Duty Spare Tire Carrier.

HINGE ACCESSORIES

OFF-ROAD JACK CARRIER

With your adventurous attitude and determined spirit, you tend to get yourself stuck in between a rock and a hard place. . . literally. With the help of your Off-Road Jack and the support of the MORryde Off-Road Jack Carrier, you will be able to play more and worry less. Our carrier conveniently attaches to the MORryde Heavy-Duty Tailgate Hinges (sold separately) with just a few pieces of hardware.





JK Off-Road Jack Carrier



TJ Off-Road Jack Carrier

JP54-010 JK/JL Off-Road Jack Carrier
JP54-024 TJ Off-Road Jack Carrier

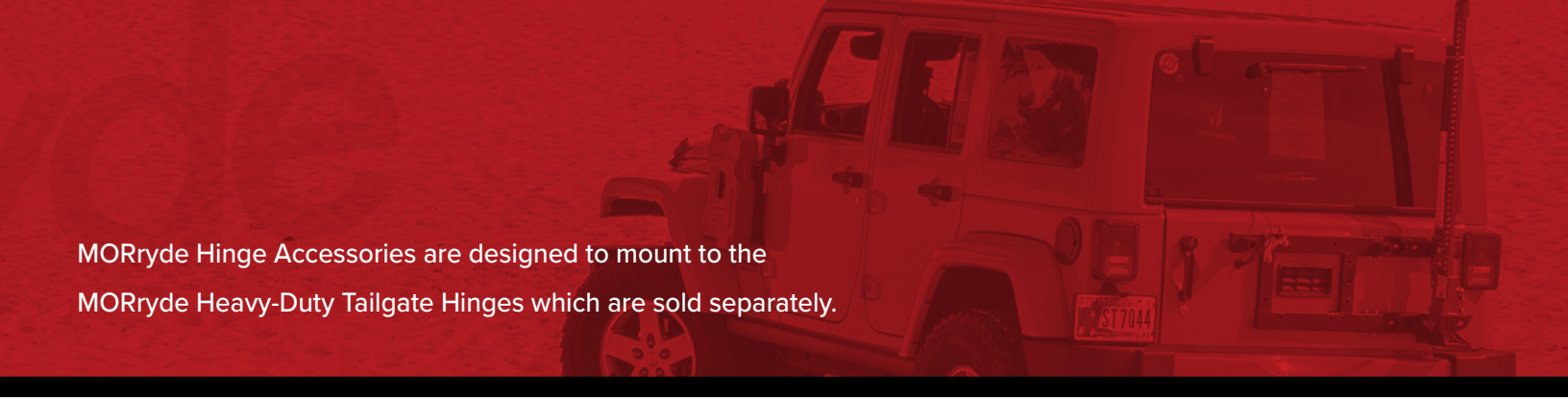

MORryde Hinge Accessories are designed to mount to the MORryde Heavy-Duty Tailgate Hinges which are sold separately.

ROTOPAX CARRIER*

JL JK TJ

Set yourself apart and go the distance with the MORryde Rotopax Carrier. While others turn the wheel and call it a day, you are able to stay, play, and explore further. With just a few pieces of hardware, our Rotopax Carrier easily attaches to the Heavy-Duty Tailgate Hinges (sold separately). No drilling or additional holes necessary.

- Holds a 1.0, 1.75, 2.0, or 3.0-gallon Rotopax fuel container
- Easy to remove when not needed

JP54-012 JK/JL Rotopax Hinge Mount
JP54-023 TJ Rotopax Hinge Mount





JK Rotopax Carrier



JK Rotopax Carrier

ROTOPAX CARRIER

* Rotopax not included

STOREGATE

Like all vehicles – big or small – space seems to be an issue. There never seems to be enough room for your cleaning supplies, tools, towing gear, and other items you consider necessary. Fortunately, we came up with our very own trunk storage solution to give you added space for whatever the need.



- Mounts to the inside of your tailgate*
- Easy installation
- Lockable aluminum hard cover door with keys
- Holds up to 35 lbs on door
- Allows for over 800 cubic inches of storage space
- Water resistant bulb seal

JP54-020 JK/JL StoreGate

**Storegate DOES NOT fit with MORryde's Trail Kitchen in most Jeep Wranglers*





OVERHEAD MOLLE PANEL



- Fits 4-door Hard Top Jeep Wranglers
- Easily installs in minutes and attaches directly to roll bars with no drilling
- Accommodates Rotopax, Hi-Lift® Jack, Quick Fist Clamps, MOLLE Pouches, Recovery Shovels and other gear
- Conveniently stores your gear out of sight
- 35 lb weight capacity

JP54-051 JKU Overhead MOLLE Panel





OVERHEAD MOLLE PANEL



- Fits 4-Door Hard Top Jeep Wranglers
- Mounting hole options to attach your gear
- Accommodates Rotopax, Hi-Lift® Jack, Quick Fist Clamps, MOLLE Pouches and other gear
- Conveniently stores your gear out of sight
- Easily installs in minutes with no drilling
- 35 lb weight capacity

JP54-079 JLU Overhead MOLLE Panel





OVERHEAD STORAGE LOCK BOX

Conveniently store your recovery gear, tools, or valuables out of sight and locked away for safe and effective storage.

- Mounts above the roll bars – out of sight
- Swings down for easy access
- Lockable door with keys for security
- Easily bolts to the roll bars in minutes
- Maximizes your storage
- 35 lb weight capacity
- No drilling required
- 36"w x 10"d x 5"h
- Fits 4-Door Hard Top Jeep Wranglers



JP54-070 JKU Overhead Storage Lock Box

OVERHEAD STORAGE LOCK BOX

Conveniently store your recovery gear, tools, or valuables out of sight and locked away for safe and effective storage.

- Mounts above the roll bars – out of sight
- Swings down for easy access
- Lockable door with keys for security
- Easily bolts to the roll bars in minutes
- Maximizes your storage
- 35 lb weight capacity
- No drilling required
- 36"w x 10"d x 5"h
- Fits 4-Door Hard Top Jeep Wranglers



JP54-080 JLU Overhead Storage Lock Box

OVERHEAD STORAGE

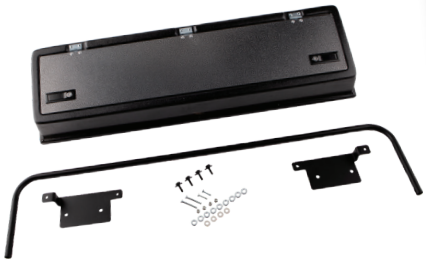



AMMO CAN TRAY & GRID



The MORryde Ammo Can Tray and Accessory Grid were designed to utilize that hard-to-use cargo space over your Jeep Wrangler wheel wells. Ammo cans are perfect for carrying your recovery supplies such as chains, recovery straps, tools, or other gear needed on the trail. The Ammo Can Tray makes for easy and efficient storage of those items. The Accessory Grid allows you to attach standard MOLLE pouches and other gear right underneath the Ammo Can Tray, keeping all those loose items close and secure.

- Easily installs using factory holes
- The tray attaches directly to the Accessory Grid and is a great place for spare batteries and ammo cans
- Rugged 14-gauge steel construction and durable powder coat finish
- Supports all common ammo can sizes
- Conveniently holds battery for kitchen

JP54-030 JKU Ammo Can Kit (Tray & Accessory Grid)
JP54-031 JKU Ammo Can Tray Only



USING ONLY THE AMMO CAN TRAY

The Ammo Can Tray can be installed to many aftermarket accessories such as Swing-Away Spare Tire Carriers and MORryde Side Mounts.

Get added storage by mounting Ammo Can Trays to both sides of your Jeep with the MORryde Side Mounts. (See page 18 and 19 for Side Mount details.)

SPARE TIRE MOUNT & TRAY

While you were conquering some far-off adventure, MORryde was busy dreaming up new accessories for your Jeep — the kind of aftermarket add-ons that let Jeep enthusiasts venture even greater distances. A MORryde Spare Tire Mount and Tray will allow you to carry the fuel, water, or supplies you'll need so you can take the road less traveled.



- Mounts directly to spare tire carrier
- No drilling required
- Can be removed in minutes when not needed



JP54-005 Rear Mount w/ Tall Tray

FIT GUIDE

- Any JK with the stock spare tire carrier
- Any JK with the MORryde spare tire carrier installed
- Any vehicle with a spare tire carrier that has at least a 3" diameter clearance hole centered in the middle of the lugs AND has a lug pattern of 5 x 4.5", 5 x 5", or 5 x 5.25"



SIDE MOUNTS & TRAYS

Store your fuel or water cans up and out of the way of hazards with the MORryde Side Mounts and Trays. The kit includes an easy-to-mount tray as well as a ratchet strap for securing your favorite storage can. Carry the fuel, water, or supplies you'll need for a long trail run without taking up your precious cargo space.



JK Side Mount w/Universal Tray

- Side Mount is compatible with a Rotopax mount
- Attach a Universal Tray for use with a Jerry, NATO, and Scepter cans
- No drilling - Attaches to mounting points already present in the Jeep
- Acts as a secondary provision for mounting your CB antenna
- Can be removed in minutes when not needed

JP54-013 - JK Side Mount (Driver Side)
JP54-014 - JK Side Mount (Passenger Side)
JP54-018 - JK Side Mount w/Universal Tray (Driver Side)
JP54-019 - JK Side Mount w/Universal Tray (Passenger Side)

JP54-061 - JL/JT Side Mount (Passenger Side)
JP54-062 - JL/JT SIde Mount (Driver Side)
JP54-063 - JL/JT Side Mount w/Tray (Passenger Side)
JP54-064 - JL/JT Side Mount w/Tray (Driver Side)



JK Side Mount w/Rotopax Carrier





JL Side Mount w/Tray



TJ Side Mount w/Tray





JL Side Mount w/Tray

- Mounts to the frame of your Jeep just in front of the passenger or the driver side door.
- Simple bolt-on installation and no drilling
- Tray holder slides into a frame-mounted receiver and can be installed or removed in minutes
- Carry an extra source of liquid for long trips
- Includes ratchet strap to secure the can

TJ YJ

JP54-007 TJ Side Mount w/Tray

TRAIL KITCHEN

A compact, modular bolt-in kitchen system that fits in the back of the Jeep Wrangler – or any vehicle with a flat surface. Perfect for tailgating or off-road adventures.

- Combine optional counters for over 5 1/2 sq. ft. of counter space
- Drawer offers 300 cu. in. of storage
- Dual lockable slides and collapsible table
- Easy to install and quick to remove
- Accommodates most fridge/freezers — Dometic, ARB 50 quart, and others
- MOLLE Grid, Fold-Out, Clip-On Counter, Sinks, and Enclosure add-ons available.









JP54-038 Trail Kitchen

FIT GUIDE

Designed to bolt in to existing D-rings on 2007-2018 Jeep Wrangler JK Unlimited (4-Door) with Bolt-On Kit (JP54-041) or 2019 - current Jeep Wrangler JL Unlimited with Bolt-On Kit (JP54-055).

The Base Trail Kitchen can be installed on any other flat vehicle surface (2-Door Jeep Wrangler, Toyota 4-Runner, Truck, Trailer, etc.) by drilling a few holes to mount it.

Bolt-On Kit – The Trail Kitchen is compatible with the Wrangler 4xe models.

PLEASE NOTE

The base of most refrigerator/freezers (50L and smaller) are narrower at the bottom and should fit inside the top tray.

Depending on the type of refrigerator/freezer, the back handle may need to be removed to fit your vehicle with the back seats up.



JP56-024	Clip-On Counter
JP54-039	MOLLE Panel
JP54-040	Fold-Out Counter
JP54-041	JKU Bolt-On Kit
JP54-055	JLU Bolt-On Kit
JP54-066	Large Tray
JP54-069	Deluxe Sink
JP54-073	Basic Sink
JP54-076	Adjustable Fridge Enclosure

TRAIL KITCHEN ADD-ONS



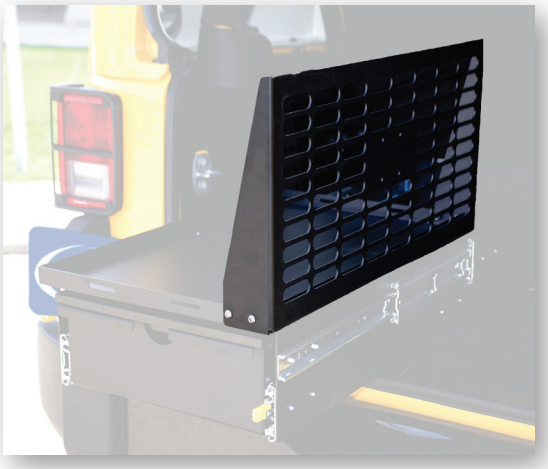

MOLLE PANEL*

• Allows for convenient storage of MOLLE pouches or a 2 gallon Rotopax container and slide out with your refrigerator

JP54-039

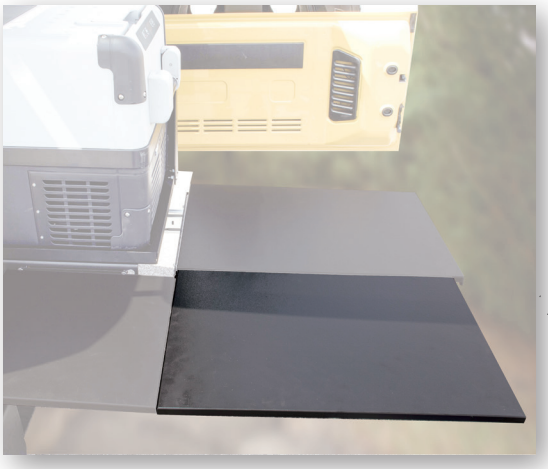

FOLD-OUT COUNTER**

• Provides additional counter top space
• Securely attaches to Trail Kitchen
• Easily stored away
• Stores in Trail Kitchen drawer

JP54-040



CLIP-ON COUNTER

• Easily attaches to the side of your Trail Kitchen
• Provides extra counter top space
• Can be removed in seconds
• Stores in Trail Kitchen drawer

JP56-024

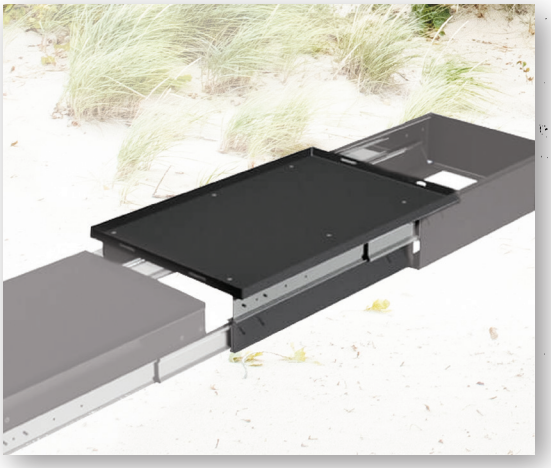

LARGE TRAY

• The largest tray option for your Trail Kitchen
• Accommodates many larger refrigerator/freezers that may not fit on our standard tray
• Easily installed with minimal equipment
• 18-1/4" W X 28-3/4" D (inside dimensions)

JP54-066

** NOT compatible with the Large Tray (JP54-066).*
*** NOT compatible with 2-burner stove kitchen (JP54-060).*

ADD-ONS



BASIC SINK**

- Convenient rubberized sink
- Allows for easy dish clean-up
- Collapses down and easily stores in the Trail Kitchen drawer

JP54-073



DELUXE SINK**

- Collapsible sink & quick-connect hoses
- Built-in water pump
- On-demand faucet & built-in drain
- Everything you need for the complete camping cook-out

JP54-069

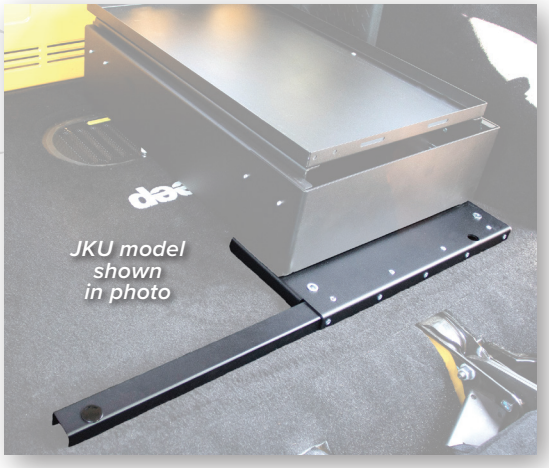

JKU & JLU BOLT-ON KIT

- Eliminates the need to drill into your Jeep
- Easy to install
- Convenient design utilizes D-rings in the rear of your JKU/JLU Wrangler to install your Jeep Trail Kitchen

JP54-041

JP54-055



ADJUSTABLE FRIDGE ENCLOSURE

- Steel MOLLE panel slide-out kitchen surround
- Designed to provide protection for cooler/refrigerator storage
- Can also serve as a mount for Rotopax liquid storage container
- Fits refrigerators up to 50 qts - 16-1/4" width and adjustable height of 17-3/4" to 20-3/4"

JP54-076

*** NOT compatible with 2-burner stove kitchen (JP54-060).*

TRAIL KITCHEN FOR TWO-BURNER TRAIL STOVES

JT JL JK TJ YJ

On-the-go adventures are even better with this trail kitchen system that has a stove tray for your compact two-burner stove.



- Stove tray (14" wide x 22" deep) holds most compact two-burner trail stoves* under fridge/freezer tray
- Dual lockable slides
- Easy to install and remove
- Top tray holds most popular fridge/freezers*
- 25.5"L x 15.75"W x 0.75"D (I.D.)

JP54-060 Trail Kitchen for Two-Burner Stove

AVAILABLE ADD-ONS**

- MOLLE Grid — JP54-039
- JKU Bolt-On Kit — JP54-041
- JLU Bolt-On Kit — JP54-055
- Large Tray — JP54-066
- Clip-On Counter — JP56-024
- Enclosure — JP56-076

PLEASE NOTE

The base of most refrigerator/freezers (50L and smaller) are narrower at the bottom and should fit inside the top tray.

Depending on the type of refrigerator/freezer, the back handle may need to be removed to fit your vehicle with the back seats up."

** Products sold separately*



HEAVY. DUTY. ADVENTURE.

MORryde

HEAVY. DUTY. ADVENTURE.

At MORryde, we have a passion for solving problems. Whether we're fabricating custom solutions, modifying a commercial chassis, or creating our innovative Jeep products, we answer to a wide range of markets and deliver on a variety of needs. At MORryde, it's simply about doing MORE for our customers, and it doesn't stop at the sale. We stand behind our products, believing in quality first, service always. No matter the issue, we'll be the first to respond and the last to be satisfied. In short, we build better — together.

1966 Sterling Avenue • Elkhart, Indiana 46516
574-293-1581 • sales@morryde.com • MORryde.com

MADE IN THE USA