CRE3000 SUSPENSION SYSTEM

OWNER'S MANUAL

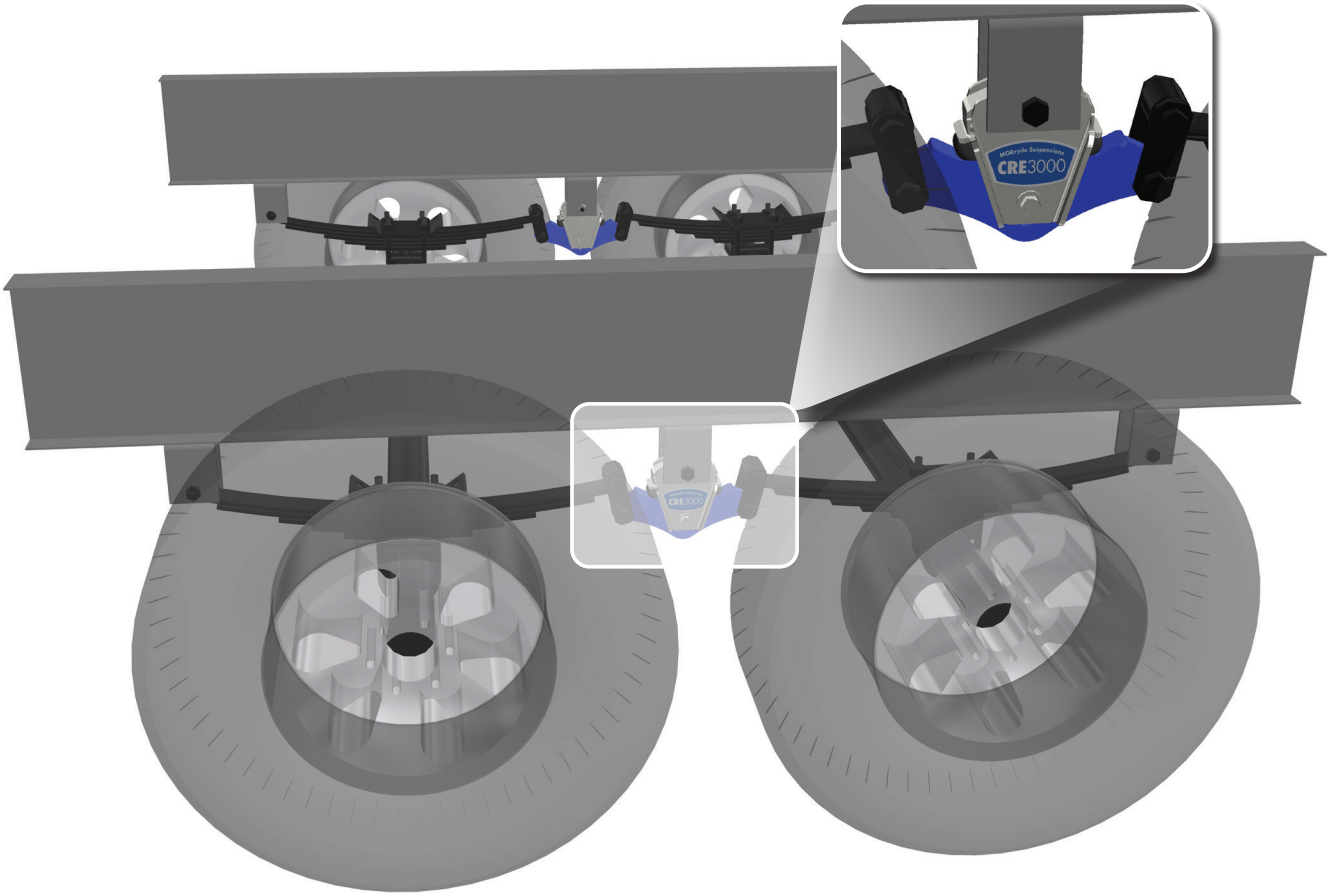

MORryde

Above. Beyond. Always.

CRE3000 SUSPENSION SYSTEM

OWNER'S MANUAL

CONTENTS

Introduction 2

Parts List 3

Tripe Axle Setup 4

Rubber Shear Spring Inspection 5

Basic Troubleshooting, Maintenance, & Warranty 6

Tandem Installation 7

Triple Installation 8

MORryde

Above. Beyond. Always.

INTRODUCTION

Your recreational vehicle has been equipped with the MORryde **CRE**3000 Suspension System. The MORryde system is located between the tandem axles on your trailer, replacing the steel equalizer (see diagram below). This system is uniquely engineered to work in concert with your steel leaf spring suspension to improve overall suspension performance.

At the heart of your MORryde system are MORryde's rubber springs that have been a mainstay in the recreational vehicle market for over 40 years. This system has been engineered specifically for your trailer using the rubber springs' ability to isolate and absorb road shock and increase your trailer's overall dynamic axle travel. The combination of the MORryde rubber equalizer working in concert with your trailer's leaf springs will greatly enhance your suspension system's ability to deal with today's rough roads. This means you will experience:

- **Smoother towing than with a conventional equalizer and leaf springs**
- **Better protection of your trailer from damaging road shock**

This manual will outline basic troubleshooting and check procedures for your MORryde Suspension System. Service manuals and instructions will be provided with replacement parts in the unlikely event that service is required.

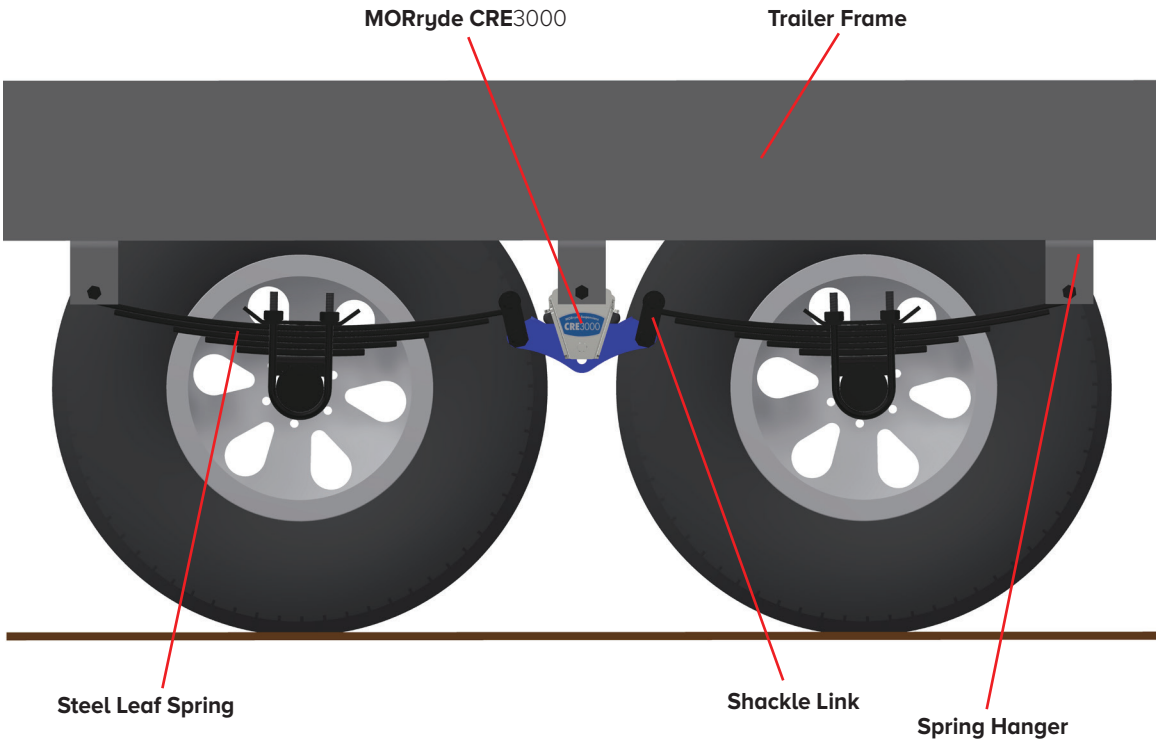

PARTS LIST:

1. Equalizer Beam
2. Rubber Compression Spring
3. Spring Carrier
4. Plastic Glide Pad
5. Bronze Bushing
6. Hex Coupler Nut
7. Washer
8. Bolt

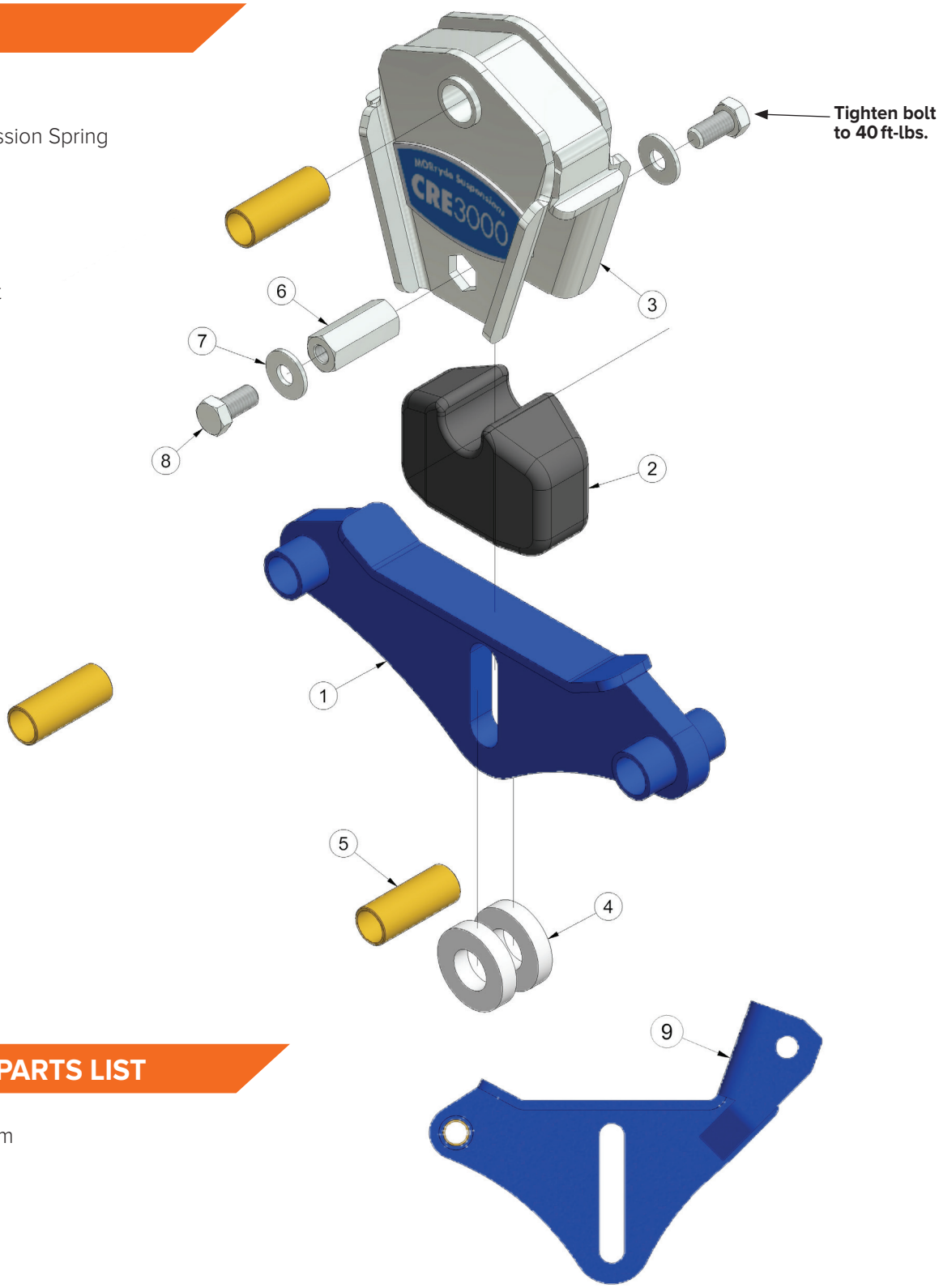

ADDITIONAL PARTS LIST

9. Control Beam Arm

MORryde

Above. Beyond. Always.

TRIPLE AXLE SETUP

The CRE assembly that has the Control Beam Arm **ALWAYS** gets installed between the front axle and the center axle.

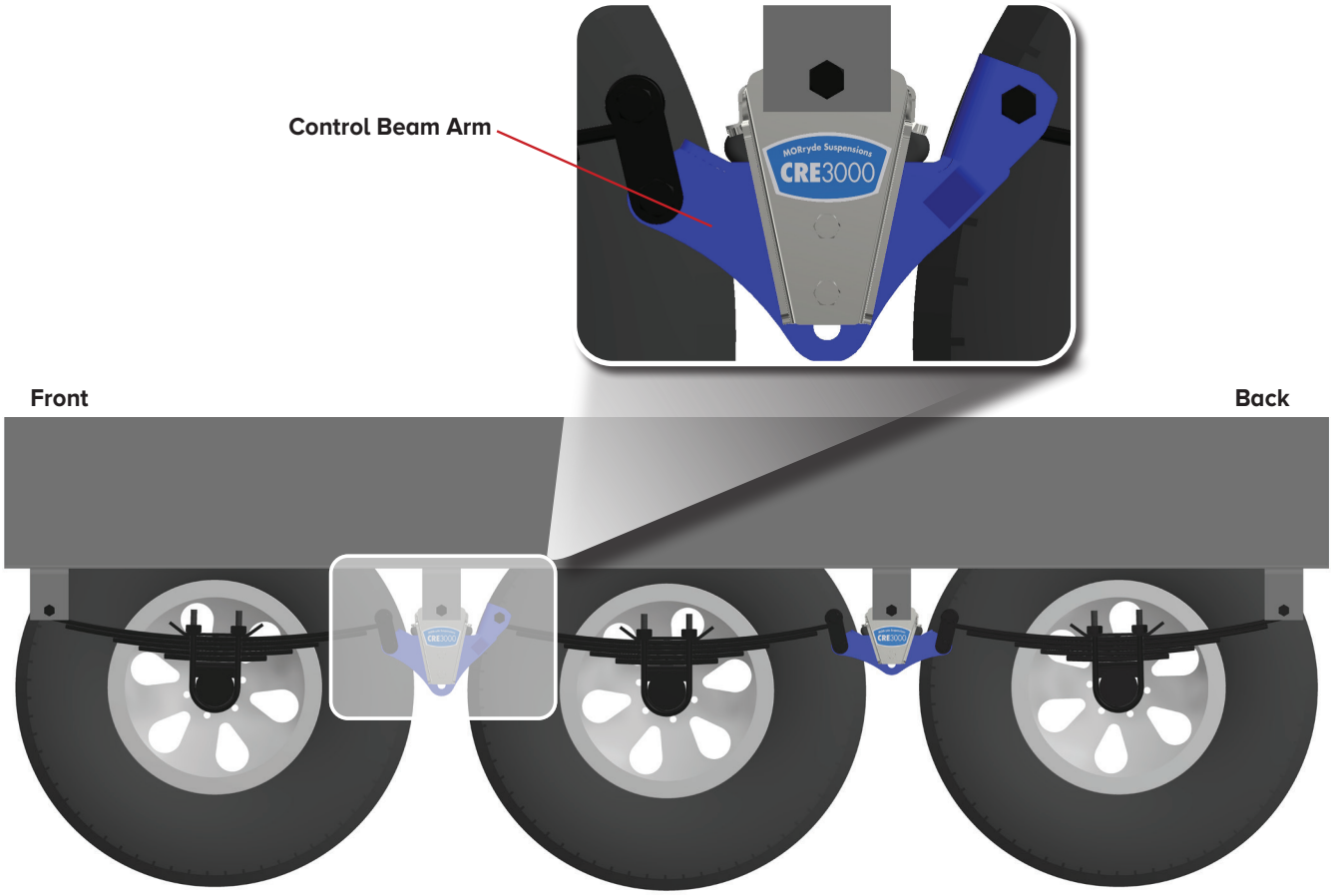

RUBBER SPRING INSPECTION

The rubber springs (Item #2 in Parts Listing) should be periodically inspected for deterioration. Figure 1 shows a rubber spring in good condition. If the tabs that protrude from either side of the Spring Carrier (Item #3 in Parts Listing) are touching the top of the Beam Arm (Item #1 in Parts Listing) as shown below, figure 2 shows the spring rate of the spring has been affected and the equalizer should be replaced.

NOTE: It is normal to see rubber spring weather checking, which are small surface cracks in the rubber. Weather checking does not require an equalizer to be replaced. It is also common to see minor tearing or fretting of the rubber around the edges.

figure 1

CRE3000 with rubber spring in good condition shown at design load

figure 2

CRE3000 with rubber spring worn out

BASIC TROUBLESHOOTING

PROBLEM	CAUSE	REMEDY
Excessive Tire Wear	Axle alignment: • Improper tire pressure* • Tires out of balance • Improper brake adjustment	Align axles • Adjust air pressure* • Balance tires • Adjust brakes
Rough Ride	• Torn rubber spring • Trailer is not level front to back	• Replace the **CRE**3000 equalizer • Adjust pin box height to level out trailer
Excessive Sway	• Improper tire pressure* • Torn rubber spring • Improper hitch weight	• Adjust air pressure* • Replace **CRE**3000 equalizer • Travel trailers should have 10%-15% hitch weight • 5th wheel trailers should have 20% -25% hitch weight

*** According to tire manufacturer specifications, proper tire pressure means inflating tires according to individual wheel weights (as long as a wheel is not overloaded), not necessarily inflating to the maximum pressure as specified on the tire.**

If you have any questions, please give us a call at **574-293-1581** or send an email to **parts@MORryde.com**.

MAINTENANCE

Properly maintained wet bolts keeps your suspension moving smoothly and helps prevent metal-on-metal wear.

1. Ensure wet bolts are torque marked and bolt hasn't moved.

2. Grease wet bolts once or twice a year until the grease can be seen. Greasing them will extend the life of the joints.

WARRANTY

Please visit **www.MORryde.com** for warranty information.

TANDEM INSTALLATION INSTRUCTIONS

The MORryde **CRE**3000 is the affordable way to upgrade your 5th wheel or travel trailer. By replacing the steel equalizers with shock-absorbing rubber compression springs, the **CRE**3000 allows up to 3.0" of total suspension travel.

PARTS LIST:

- (2) **CRE**3000 Equalizers

TOOLS REQUIRED:

- Torque Wrench
- 11/16" or 3/4" Socket & 13/16" Wrench
- Floor Jacks
- Safety Stands
- Ratchet

INSTALLATION:

Step 1

Loosen all lug nuts. Using appropriately rated jacks, raise the unit and support the frame with safety stands. Support the axles with floor jacks and remove all wheels.

Step 2

Remove the shackle links from the equalizer, then remove the shoulder bolt from the frame hanger.

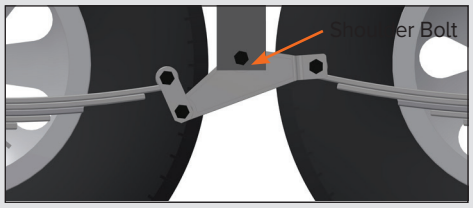

Step 3

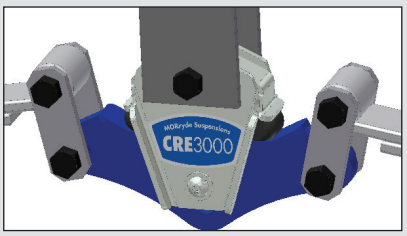

Replace the stock equalizer with the CRE3000. Use a hammer to tap the shoulder bolt into the frame hanger. If it has a grease zerk, use a small diameter socket to fit over the zerk and tap the bolt in place or remove the zerk, tap the bolt in place, and reinstall the zerk. Make sure the grease exit hole faces the 3 or 9 o'clock posoition for proper grease flow. Reinstall the shackle links and tighten all nuts to 40 ft-lbs. Use a 13/16" wrench to hold the bolt in position while tightening the nuts with an 11/16" or 3/4" socket. If a 3/4" socket is being used to tighten 1/2-20 nuts onto the wet bolts, torque to 80 ft-lbs.

Step 4

Reinstall all wheels, then remove the jacks and supports from the frame and axles. Torque all lug nuts according to manufacturer specifications.

MORryde

Above. Beyond. Always.

TRIPLE INSTALLATION INSTRUCTIONS

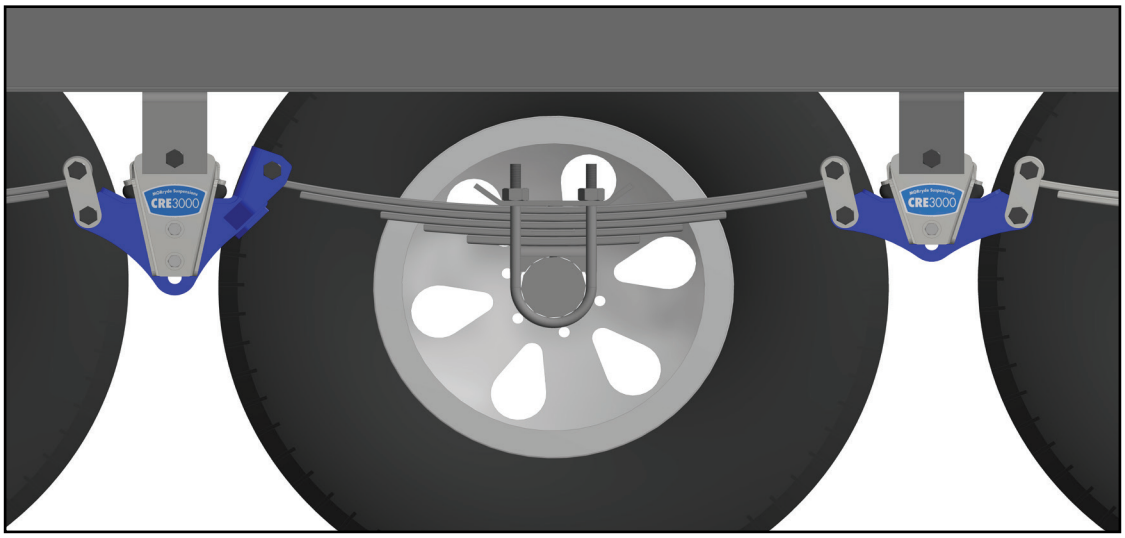

The MORryde **CRE**3000 is the affordable way to upgrade your 5th wheel or travel trailer. By replacing the steel equalizers with shock-absorbing rubber compression springs, the **CRE**3000 allows up to 3.0" of total suspension travel.

PARTS LIST:

- (2) **CRE**3000 Standard Equalizers
- (2) **CRE**3000 Equalizers with Center Axle Control Beam

TOOLS REQUIRED:

- Torque Wrench
- 11/16" or 3/4" Socket & 13/16" Wrench
- Floor Jacks
- Safety Stands
- Ratchet

INSTALLATION:

Step 1

Loosen all lug nuts. Using appropriately rated jacks, raise the unit and support the frame with safety stands. Support the axles with floor jacks and remove all wheels.

Step 2

On the curbside of the unit, remove the shackle links from the front leaf spring, remove the shoulder bolt from the center leaf spring, and then remove the shoulder bolt from the top of the equalizer.

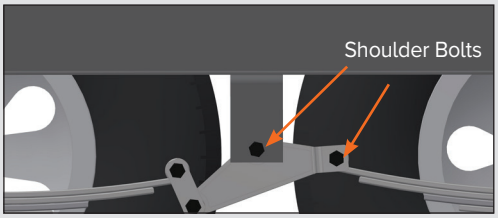

Step 3

Replace the stock equalizer with the **CRE**3000 that has the center axle control beam. Use a hammer to tap the shoulder bolt into the frame hanger. If it has a grease zerk, use a small diameter socket to fit over the zerk and tap the bolt in place or remove the zerk, tap the bolt in place, and reinstall the zerk. Make sure the grease exit hole faces the 3 or 9 o'clock position for proper grease flow. Reinstall the shackle links and tighten all nuts to 40 ft-lbs. Use a 13/16" wrench to hold the bolt in position while tightening the nuts with an 11/16" or 3/4" socket. If a 3/4" socket is being used to tighten 1/2-20 nuts onto the wet bolts, torque to 80 ft-lbs.

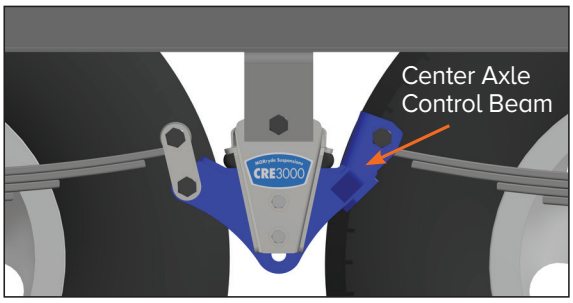

NOTE: If the trailer is equipped with a Correct Track system, the **CRE**3000 can only be installed using the center or intermediate positions of the dial (see Figures 1 and 2). When using the intermediate setting of the Correct Track dial, trim the corner of the hanger opposite the offset of the shoulder bolt on both the inside and outside of the hanger (the red area outlined in Figure 2). This must be done on the curbside as well as the roadside of the trailer.

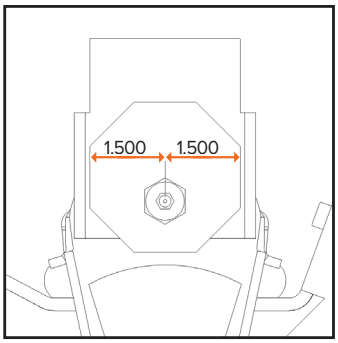

Figure 1 - Center Setting

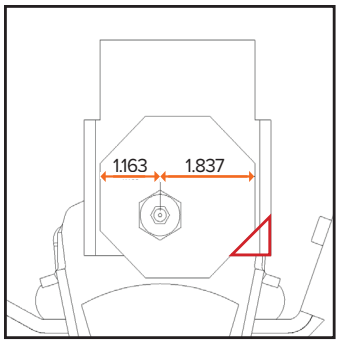

Figure 2 - Intermediate Setting*

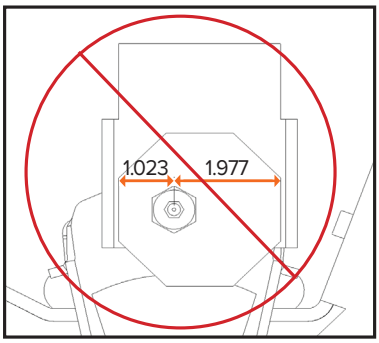

Figure 3 - Extreme Setting*

⚠ WARNING: The **CRE**3000 cannot be used with a Correct Track system when the dial is in the Extreme setting as no amount of trimming will prevent contact between the **CRE**3000 and the Correct Track.

*Both the intermediate and extreme settings can occur on either side of center. In Figures 2 and 3, the settings are shown as offset to the left, but they can occur as offset to the right, as well.

Step 4

Remove the floor jack from the front axle and use it to support the rear axle.

Step 5

Remove the shackle links from the rear equalizer, then remove the shoulder bolt.

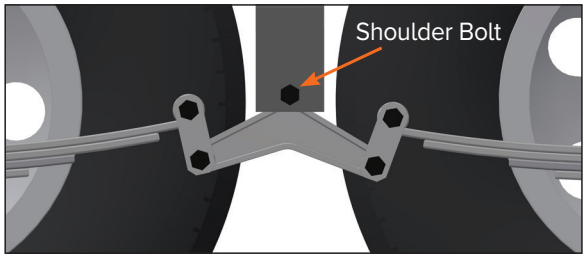

Step 6

Replace the stock equalizer with the Standard **CRE**3000. Replace the shoulder bolt. Use a hammer to tap the shoulder bolt into the frame hanger. If it has a grease zerk, use a small diameter socket to fit over the zerk and tap the bolt in place or remove the zerk, tap the bolt in place, and reinstall the zerk. Make sure the grease exit hole faces the 3 or 9 o'clock position for proper grease flow. Reinstall the shackle links and tighten all nuts to 40 ft-lbs. Use a 13/16" wrench to hold the bolt in position while tightening the nuts with an 11/16" or 3/4" socket. If a 3/4" socket is being used to tighten 1/2-20 nuts onto the wet bolts, torque to 80 ft-lbs.

Step 7

Repeat Steps 2-6 for the opposite side of the unit.

Step 8

Reinstall all wheels, then remove the jacks and supports from the frame and axles. Torque all lug nuts according to manufacturer specifications.

At MORryde, we have a passion for solving problems. Whether we're fabricating custom solutions, modifying a commercial chassis, or creating our innovative products, we answer to a wide range of markets and deliver on a variety of needs. At MORryde, it's simply about doing MORE for our customers, and it doesn't stop at the sale. We stand behind our products, believing in quality first, service always. No matter the issue, we'll be the first to respond and the last to be satisfied. In short, we build better — together.

MORryde
Above. Beyond. Always.
574.293.1581 • MORryde.com •