INDEPENDENT SUSPENSION 2.0

OWNER'S MANUAL

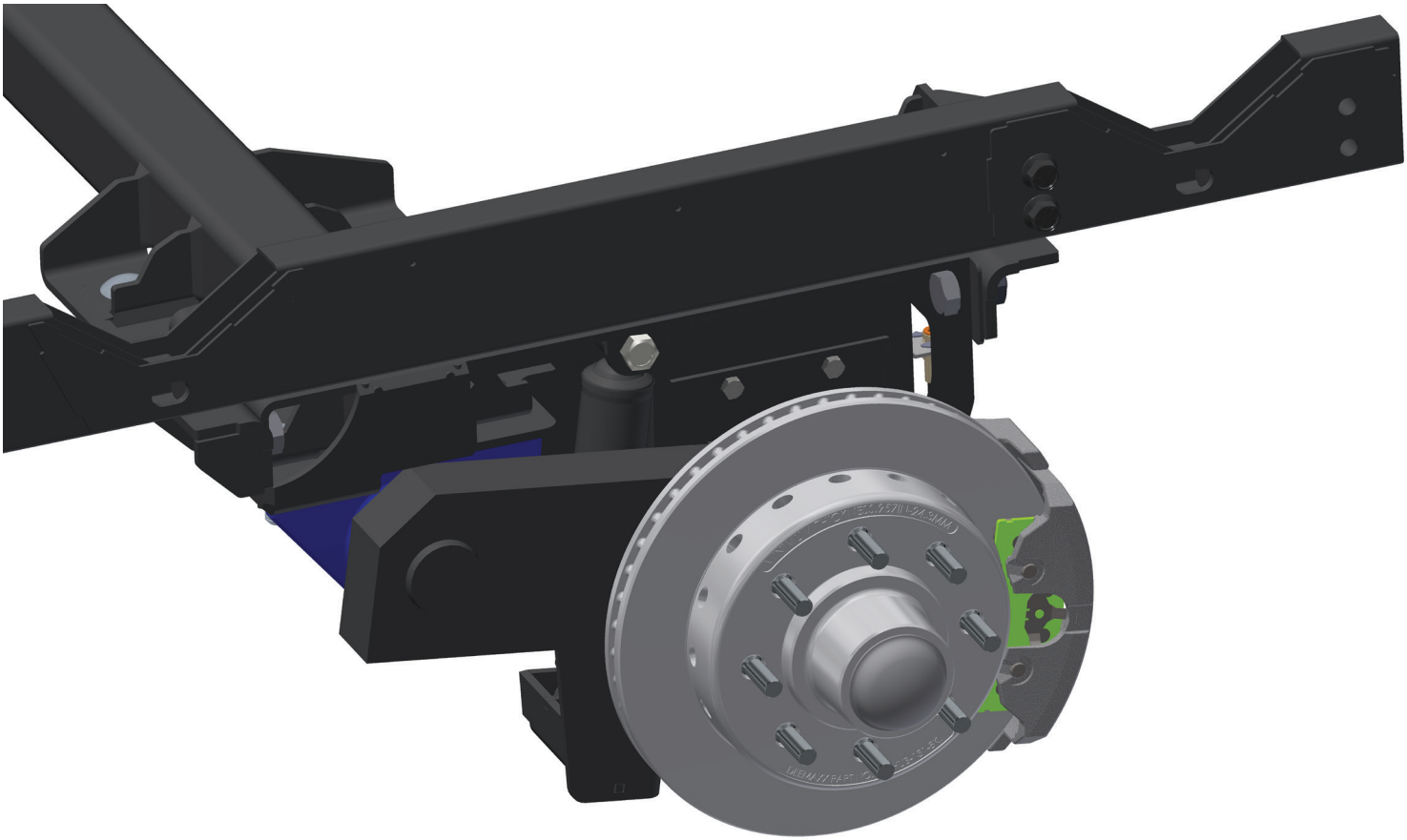

Above. Beyond. Always.

574.293.1581
www.MORryde.com

INDEPENDENT SUSPENSION SYSTEM 2.0

OWNER'S MANUAL

CONTENTS

Introduction 3

Disc Brake & Related Replacement Parts List 4

Service Procedures 5

Rubber Shear Spring Inspection, Deflection and Replacement 6

Rubber Shear Spring Procedures 7

Bearing Pack Procedures 8

Alignment Procedures 9

Tire Maintenance 12

Brakes and Bearings Maintenance 14

Shock Absorber Maintenance and Replacement 14

Replacement of Beam Assembly 15

Torque Chart 15

Troubleshooting 16

Brake Control Setup 18

INDEPENDENT SUSPENSION SYSTEM 2.0

INTRODUCTION

The MORryde Independent Suspension 2.0 system uses 100% natural rubber springs to support the trailer weight and absorb road shock. By absorbing road shock, the rubber provides a much smoother towing experience than steel leaf springs. With the new MORryde I.S. system, there are no more broken leaf springs! The towing is virtually hassle-free with the smoothest towing available for 5th wheels and travel trailers.

NOTE: While the Independent Suspension 2.0 system is designed to be bolt-on installation, there may be cases in which welding is required.

The primary benefits that you can expect from the MORryde I.S. system are:

SMOOTHER TOWING - The MORryde suspension has up to 2 1/2 times the suspension travel of leaf springs or rubber axles, allowing it to better absorb road shock.

IMPROVED TOWABILITY - The MORryde suspension is designed to “block” body roll, improving the cornering and stability of the tow vehicle and trailer combination.

AUTOMOTIVE STYLE ALIGNMENT - You can manage your tire wear through toe and camber adjustments, a feature no other towable suspension offers.

HEIGHT ADJUSTABILITY - The MORryde suspension can be adjusted easily to accommodate different tow heights and compensate for side-to-side load variations.

PROVEN DURABILITY - The MORryde suspension has undergone strenuous testing to prove its durability. The result? No more broken leaf springs!

U.S. PAT. NO. 5,899,470

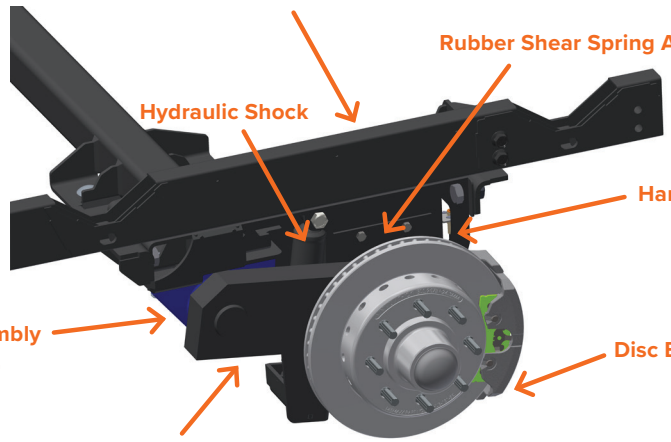

INDEPENDENT SUSPENSION SYSTEM 2.0

DISC BRAKE & RELATED REPLACEMENT PARTS LIST

Qty*	Part Number	Description
2	UO138-157	MOUNTING BRACKET - 5 BOLT
10	UO115-853	5 BOLT MOUNTING BRACKET BOLT
10	UO116-383	5 BOLT MOUNTING BRACKET NUT
2	UO138-116	MOUNTING BRACKET - 4 BOLT
8	UO115-1125	4 BOLT MOUNTING BRACKET BOLT
8	UO116-381	4 BOLT MOUNTING BRACKET NUT
2	UO138-159	ROTOR / HUB 1/2" STUD - 6K
2	UO138-114	ROTOR / HUB 9/16" STUD - FOR SCREW-IN CAP - 8K
2	UO138-137	ROTOR / HUB 5/8" STUD - 8K
2	UO138-106	INNER RACE 25520 - 8K
2	UO138-105	OUTER RACE 8K / INNER RACE 6K 02420
2	UO138-234	OUTER RACE 15245 - 6K
2	UO138-033	2.25" SEAL (010-036-00 / GS-2250DLR)
2	UO138-030	OUTER BEARING 15123 - 6K
2	UO138-034	INNER BEARING 25580 - 8K
2	UO138-029	OUTER BEARING 02475 - 8K
2	UO138-158	CALIPER - 6K
2	UO38-115	CALIPER - 8K
4	UO138-136	CALIPER BOLT
1	UO138-190	BRAKE PADS - 6K
1	UO138-139	BRAKE PADS - 8K
2	UO138-101	SPINDLE WASHER
2	UO116-434	SPINDLE JAM NUT
2	UO138-084	SPINDLE NUT RETAINER CLIP
2	UO109-037	SHOCK ABSORBER (MONROE GPNMON555002)
2	UO138-171	GREASE CAP - 6K
2	UO138-064	SCREW-IN GREASE CAP - 8K
2	UO138-229	PRESS-IN GREASE CAP - 8K
2	UO138-228	ROTOR / HUB 9/16" STUD FOR PRESS-IN CAP - 8K

*Quantities listed are per axle.

INDEPENDENT SUSPENSION SYSTEM 2.0

SERVICE PROCEDURES

NOTE: All service procedures must be performed while the vehicle is supported at the frame with appropriately rated safety stands and jacks.

Maintenance on the I.S. system is minimal. For service information regarding braking systems or bearing options on your trailer, please consult the owner's manual provided by the brake manufacturer.

BEARING & TORQUE BRACKET SERVICE

How often should I re-pack my bearings?
Every 12,000 miles or 1 time a year; whichever comes first.

How often should I grease my torque brackets?
Every 12,000 miles or 1-2 times a year.

What kind of grease do you use for the bearings and the torque brackets?
MORryde recommends using a high-quality, multipurpose, extreme pressure (EP) lithium complex grease for automotive wheel bearing use. It should be NLGI GC-LB certified and NLGI Grade 2.

JACKING UP A UNIT

The unit should always be jacked up at the frame of the trailer. Place safety stands near the front and rear of the trailer frame. To perform suspension work, the unit should be raised so that the tires are approximately 1" off the ground. In an emergency, it is permissible to place a jack under the I.S. beam assembly under the rubber springs to change a tire.

1 - Bottleneck jack placement

2 - Floor jack placement

INDEPENDENT SUSPENSION SYSTEM 2.0

SERVICE PROCEDURES

HEIGHT ADJUSTMENT

The I.S. system provides trailer height adjustment. There is an extra set of holes in the hanger assembly that can be used to adjust the height of the trailer. The trailer can also be adjusted from side to side to compensate for uneven loads. The adjustment holes are located where the rubber springs bolt to the frame. Installing the rubber springs into the lower set of holes will raise the trailer by 1".

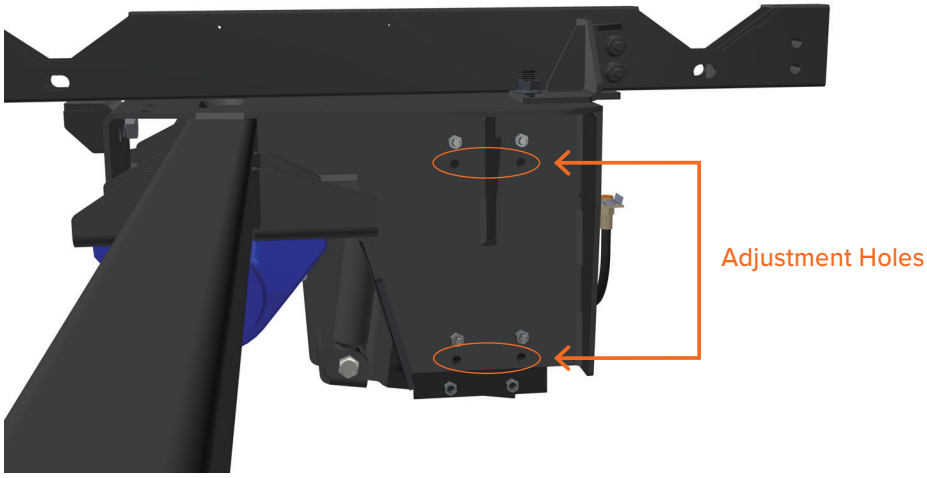

RUBBER SHEAR INSPECTION, DEFLECTION & REPLACEMENT

INSPECTION

MORryde rubber springs are made of a special formulation of natural rubber and are bonded to steel plates. There are two unlikely problems that may occur with MORryde rubber springs:

1. **Bond failure:** This condition is apparent when the rubber separates or delaminates from the metal plate.
2. **Rubber failure:** This condition is apparent when the rubber tears or rips apart in the middle of the rubber spring, but not against the plates.

The rubber springs on your I.S. system should be periodically inspected for any tears or cracks. If a rubber spring has a 3" wide **AND** 3/4" deep crack or tear, it should be replaced. A flat tool such as a putty knife can be used as a probe to check this. If the knife can be inserted into the rubber to a depth of 3/4" or more **AND** at a width of 3" or more, the rubber should be replaced.

INDEPENDENT SUSPENSION SYSTEM 2.0

RUBBER SHEAR SPRING PROCEDURES

NOTE: It is normal to see small surface cracks in the rubber. Small surface cracks ***do not*** require a rubber spring replacement.

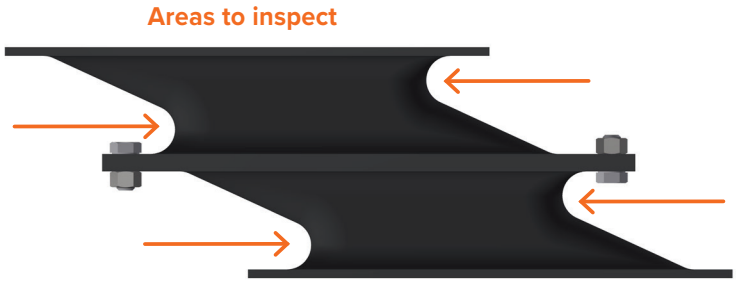

DEFLECTION

If you're experiencing issues with ride quality, you can determine the rubber shear spring deflection by following the steps below.

1. Park the vehicle on level ground.
2. Measure Dimension A: From the ground to the bottom edge of the rubber spring at the hanger.
3. Measure Dimension B: From the ground to the center mold line of the outer rubber spring plate at the beam assembly.
4. Use the formula below to determine inches of rubber spring deflection.

DEFLECTION FORMULA

1. Dimension **A** - Dimension **B** = C
2. 5 - C = Deflection

NOTE: The measurements above should only be taken while hooked up to your tow vehicle for accuracy.

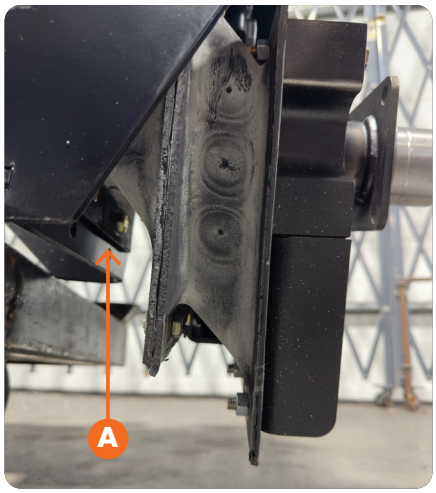

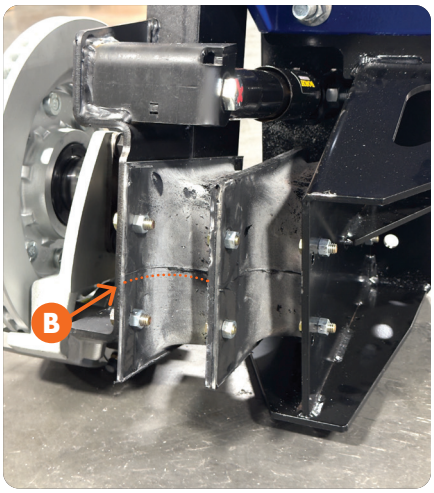

RUBBER SHEAR SPRING PROCEDURES, CONTINUED

REPLACEMENT

MORryde INDEPENDENT SUSPENSION **SPRING CHANGE PROCEDURE**

1. Raise and support the RV and remove the wheels.
2. Remove the shock. Start by removing the nut and bolt from the top of the shock.
3. Remove the bottom nut and bolt on the shock.
4. Remove the rubber shear spring by removing the nuts from the top outside spring bolts. The top bolts cannot be removed, push them as close as possible to the brake flange.
5. Remove the outside bottom nuts of the spring. After removing the bottom nuts, remove the four nuts on the shear spring mount.
6. Begin to remove the remaining bolts from the spring mount and beam assembly.
7. With all of the bolts removed, you can now begin removing the spring.
8. Install the new spring by placing it in between the hanger mount and beam assembly. Use a hammer to manipulate the spring into place. **Note:** You don't have to remove the brake hub and brake caliper to change the spring.
9. Use a floor jack to aid in lifting the beam assembly up to align the bolt holes. Once aligned, begin reinstalling the bolts.
10. Reinstall the shock absorber. Tighten the nuts and bolts until they touch the shock mounts.
11. Tighten all the spring nuts (torque to 40 ft-lbs).
12. Reinstall the wheels.
13. Lower the RV and torque the lug nuts to manufacturer specifications.

BEARING PACK PROCEDURES

MORryde INDEPENDENT SUSPENSION **BEARING PACK PROCEDURE**

1. Raise and support the RV and remove the wheels.
2. Remove the dust cap.
3. Remove the top and bottom caliper bolts that hold the caliper onto the caliper bracket and remove the brake caliper.
4. Remove the retainer clip or cotter pin, then remove the spindle nut, and the spindle washer.
5. Wiggle the hub/rotor left and right until the outside bearing comes out (be careful not to drop the bearing).
6. Carefully remove the hub/rotor and place it on its face.

INDEPENDENT SUSPENSION SYSTEM 2.0

BEARING PACK PROCEDURES, CONTINUED

7. Remove the grease seal (anytime a hub is removed, the seal should be replaced, and never reused).
8. Remove the inner bearing. Clean and inspect both the inner and outer bearing. Look for defects like scratching and scorching.
9. Clean the hub/rotor, bearings, and grease cap with a cleaning solvent and a brush. Spray and wipe away any excess dirt or grime.
10. Reinspect the bearings for discoloration or scratches/scoring.
11. Grease the inner bearing race and pack the bearings with grease.
12. Replace the inner bearing in the hub and install the new grease seal. Wipe away excess grease from hub/rotor.
13. Wipe away old grease on the spindle.
14. Add grease to the spindle.
15. Replace the hub/rotor. The inner bearing and grease seal should already be installed in the hub.
16. Replace the outer bearing, spindle washer, and spindle nut. Add grease to the outer race.
17. While spinning the hub/rotor, torque the spindle nut to 50 ft-lbs. Loosen, then finger-tighten the nut.
18. Replace either the cotter pin or retainer clip.
19. Replace the dust cap.
20. Replace the caliper, add blue (semi-permanent) thread locker to the caliper bolts and torque to 50 ft-lbs.
21. If using a press-in dust cap, use a rubber mallet and tap into place. If using a screw-in dust cap, torque to 25 ft-lbs.
22. Reinstall the wheels, then lower the RV.
23. Torque the lug nuts to manufacturer specifications.

ALIGNMENT PROCEDURES

The design of the I.S. system allows for automotive style toe and camber wheel alignment. This allows you to effectively manage tire wear under normal towing conditions. Wheel alignment should be done with equipment that is designed for multiple axle trailers. The I.S. system is adjustable for both toe and camber. Any alignment shop capable of aligning full-size trailers should be able to handle the job. MORryde uses laser alignment equipment. There are four bolts and one torque bracket per wheel that allow for these adjustments. Refer to the following directions for proper tow and camber alignment procedures.

INDEPENDENT SUSPENSION ALIGNMENT PROCEDURE

NOTE: Always adjust the camber first followed by the toe.

ALIGNMENT PROCEDURES, CONTINUED

ADJUSTING CAMBER

1. Enter the 5th wheel GVWR, VIN, and other relevant information into your alignment software program.
2. Using properly rated jacks, lift the trailer into the air high enough that all wheels freely spin and there is room for the alignment turntables to slide under each of the wheels.
3. Mount sensors on the king-pin T-Bar and wheels. Once mounted, ensure each of the sensors registers in the alignment software. **Note:** Ensure that wheel sensors are securely mounted to each wheel to prevent them coming loose or falling off during the alignment process. Slide an alignment turntable under each wheel.
4. Follow the software prompts in rotating each tire to compensate each of the alignment sensors.
5. Lower the trailer so that each wheel rests in the center of a turntable. Then lower all supporting jacks so that only the front trailer jacks support the trailer.
6. Using a bubble level, manipulate the front jacks to ensure that the trailer is level front-to-rear and side-to-side.
7. **A.** Loosen the 4 torque bracket nuts.
   - > If the camber is **negative**, add a shim(s) to the outside of the torque bracket.
   - > If the camber is **positive**, add a shim(s) to the inside of the torque bracket.

   B. Tighten the torque bracket nuts and verify proper camber.
8. Repeat the process on the other axles.

NOTE: The unit will need to be raised to add camber.

ALIGNMENT SPECIFICATIONS

Camber (+.20° to +.50° loaded) **or**
(+.30° to +.60° unloaded)
Toe (+/- .07°)

CAMBER SHIM SPECIFICATIONS

Shims are available in three thicknesses:
1/4 (1.23°), 11ga (.59°), and 14ga (.37°)

figure 1

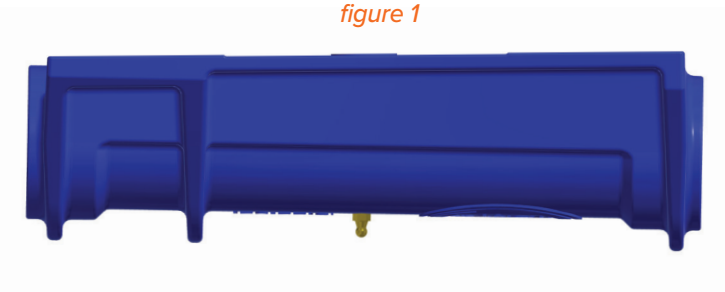

figure 2

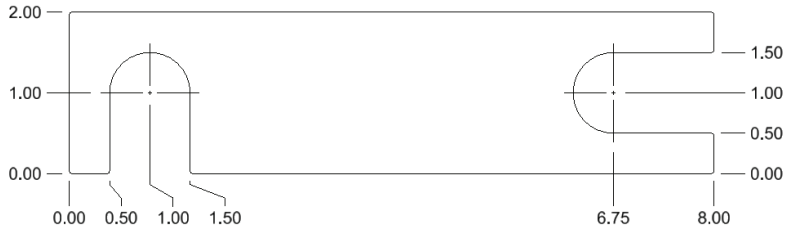

ALIGNMENT PROCEDURES, CONTINUED

ADJUSTING TOE

1. Loosen the arrow-indicated nuts as shown in ***figure 3***, below.
2. Adjust the torque bracket assembly to obtain the correct toe readings on the alignment machine.
3. Torque nuts on torque bracket to 250 ft-lbs.
4. Repeat the process for the other axles.
5. Remove the alignment equipment.
6. Raise trailer, remove alignment turntables, lower trailer, and remove jacks.

NOTE: Toe adjustments can be eased by the use of a portapower or large adjustment bar.

figure 3

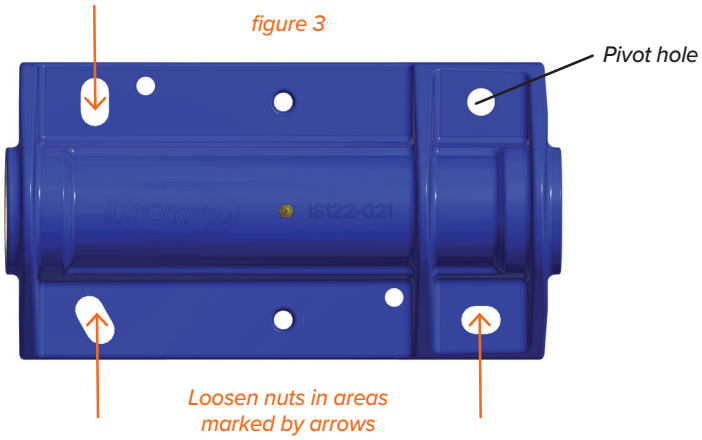

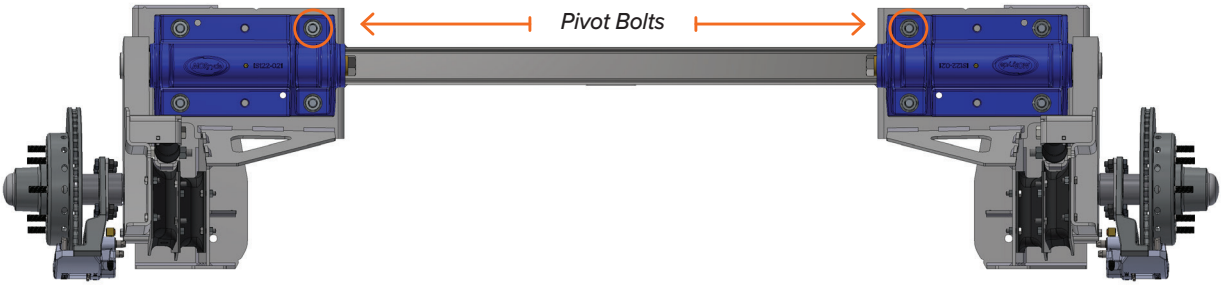

INDEPENDENT SUSPENSION SYSTEM 2.0

TIRE MAINTENANCE

PREVENTATIVE MAINTENANCE

Regularly inspect the tires for abnormal wear. If there's alignment-related wear, schedule a wheel alignment as soon as possible.

USING LARGER TIRES

When considering using larger tires, verify adequate wheel well clearances and the gap between the tires.

TIRE WEAR CHART

INDEPENDENT SUSPENSION SYSTEM 2.0

TIRE MAINTENANCE, CONTINUED

SCRUBBING

This is normal wear with the system and can appear on the outer or inner edges of the tires. It can be straight and equal or wavy. This happens from taking tight turns.

INDEPENDENT SUSPENSION SYSTEM 2.0

BRAKES & BEARINGS MAINTENANCE

PREVENTATIVE MAINTENANCE

Check brake fluid level at least once a year or during any brake performance concerns.

DISC BRAKE PAD REPLACEMENT

1. Hub/rotor cannot be picked up at an auto parts store. They can be turned if not grooved too deeply.
2. Caliper cannot be replaced at an auto parts store, but you can get a rebuild kit at the auto parts store.

The DeeMaxx Caliper will accomodate GM Replacement Pads which should be available at your local auto parts store. They will be similar, but not the same. Contact DeeMaxx or MORryde for an exact match. GM pad identification is listed below.

1. **#D-289 for 3k-6k caliper** (same pads used for 1980-1990 Buick Skylark front).
2. **#D-215 semi-metallic for 7k-8k caliper** (same pads used for 1983-1995 Cadillac Fleetwood and Deville model on the front).
3. **#D459 for 10k-12k for single piston caliper only** (same pads used for Chevrolet Pickup K30, K3500 4WD 1992-2001 rear brakes.

SHOCK ABSORBER MAINTENANCE & REPLACEMENT

Monroe hydraulic shocks are standard equipment on all I.S Systems. Shock absorbers of this type should be checked every 12,000 miles to make sure they are functioning properly, bushings are not worn, and the dust cover has not been damaged by debris from the road. The shocks should be periodically inspected for oil leaks. If a shock absorber is leaking, fails to operate, or develops an unusual noise, the shock absorber should be replaced. Consult with MORryde directly for replacements by calling the Parts Department at **574-293-1581** or emailing **parts@morryde.com**.

REPLACEMENT

To replace a shock absorber, refer to the figure and instructions below:

Shock Absorber

1. Remove the top and bottom shock mount nuts and bolts.
2. Remove the shock absorber.
3. Fully install shock mount bolts, then tighten the shock mount nuts until they touch the shock mount plates.

NOTE: Do not over-tighten nuts as this can limit the shock's ability to pivot.

INDEPENDENT SUSPENSION SYSTEM 2.0

REPLACEMENT OF BEAM ASSEMBLY

The beam assembly attaches the wheel and rubber suspension to the torque bracket, which is attached to the hanger assembly. Should a beam and/or spindle become damaged and need replacement, follow the steps below.

1. Jack up the unit. (See the procedures for **Jacking Up a Unit** subsection under the **Service Procedures** section on **page 5** of this document.)
2. Remove the wheel.
3. Remove the drum or disc brake components.
4. Perform a bearing pack.
5. Disconnect the shock from the lower shock mount on the beam assembly.
6. Remove the rubber shear spring from the beam assembly.
7. Remove the bolt, washer, lock washer, and roll pin at the end of the journal bar (toward the inside of the frame).
8. Pull out the beam assembly.
9. Slide in the new beam assembly. (Torque bracket bushings should be replaced if they are damaged or worn.)
10. Replace the roll pin, lock washer, washer and bolt - leave bolt loose.
11. Reinstall the rubber shear spring assembly, reconnect the shock, then align the hole in the washer at the end of the journal bar with the roll pin and torque the bolt to 460 ft-lbs.
12. Reinstall the brakes and wheels.
13. Torque lugs according to the OEM specifications.

U-Bolt Torque Pattern Visual Aid

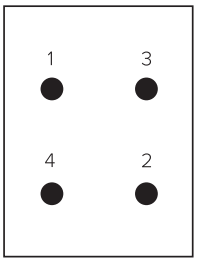

U-Bolts must be tightened and torqued using a cross-pattern sequence.

Tighten #1 and #2 to partial torque, then #3 and #4 to partial torque (100 ft-lbs).

Using the same sequence, fully torque the U-Bolt Nuts to 200 ft-lbs for ZINC-PLATED U-Bolts and 245 ft-lbs for RAW U-Bolts.

TORQUE CHART

BOLT SIZE	GRADE 5* (FT-LBS)	GRADE 8* (FT-LBS)
3/8-16	X	40
3/8-24	X	50
1/2-20	X	90
3/4-10	250 mounting bolts	250 torque bracket bolts
1-8	460	X

See manufacturer's specifications when torquing lug nuts. If manufacturer specifications cannot be found, use the following guidelines:

1/2": 100 FT-LBS	**9/16": 140 FT-LBS**	**5/8": 150 FT-LBS**

**Torque values must be verified with a torque wrench. A calibrated pneumatic impact wrench is not an acceptable substitute.*

> *Re-torque lug nuts at 100 miles and 200 miles*

See Page 18 for DeeMaxx Warranty

INDEPENDENT SUSPENSION SYSTEM 2.0

TROUBLESHOOTING

The following list covers the most frequent causes for concern that may arise with the **Independent Suspension** system. If a problem occurs that is not addressed here, please contact MORryde directly for further service information at **574-293-1581** or by emailing **parts@morryde.com**.

INDEPENDENT SUSPENSION SYSTEM

PROBLEM / SYMPTOM	CAUSE	CORRECTION
Excessive tire wear	Improper wheel alignment	Realign wheels
	Worn torque bracket bearings	Replace torque bracket bearings
	Improper tire pressure	Adjust air pressure
Rough ride	Improper rubber spring deflection	Call MORryde for a different rubber spring
	Worn shock absorbers	Replace shock absorber
	Tires rubbing on wheel well or suspension bottoming out	If spring deflection is correct and height adjustment is insufficient, a spacer tube needs to be welded between the frame and the I.S. Suspension System
Excessive sway	Improper tire pressure*	Adjust air pressure
	Torn rubber shear spring	Replace rubber shear spring
	Improper hitch weight	Travel trailers should have 10-15% hitch weight. 5th wheel trailers should have 17-25% pin weight

**According to the tire manufacturer specifications, proper tire pressure means inflating tires according to individual wheel weights, not necessarily inflating to the maximum pressure as specified on the tire.*

BEARINGS

PROBLEM / SYMPTOM	CAUSE	CORRECTION
Unusual noise	Bearing damaged or no lube	Service or replace
Wheel wobble	Bearing damaged or not torqued properly	Service or replace
Odd brake pad wear	Possible bad bearing	Service or replace
Odd tire wear	Possible bearing issue	Service or replace
High hub temperature	Damaged bearing or brakes locking	Service or replace

INDEPENDENT SUSPENSION SYSTEM 2.0

TROUBLESHOOTING, CONTINUED

TIRES

PROBLEM / SYMPTOM	CAUSE	CORRECTION
Flat tire	Defective tire	Contact tire manufacturer
	Road debris	Unavoidable
	Tire wobbling	Broken studs, loose lug nut, bad wheel bearing
	Excessive Wear	Refer to the Tire Wear Chart (pg. 12)
	Alignment	MORryde website for alignment service centers

BRAKES

PROBLEM / SYMPTOM	CAUSE	CORRECTION
No brakes	No brake fluid	Fill and bleed brakes
	Broken brake line	Replace, fill fluid, bleed
	Actuator not working	Call your respective supplier (below)
	Worn brake pads	Replace pads
	Grease or fluid on pads	Repair leak / replace pads
	Glazed brake pads	Replace pads
	Air in brake lines	Check for leaks/bleed brakes
Weak brakes	Excessive rotor wear	Turn rotor or replace
	Air in brake lines	Check for leaks/bleed
	Excessive tow weight	Reduce weight
	Actuator issue	Call your respective supplier (below)
Brake noise	Broken pads	Replace pads
	Less than 1/8" thick	Replace parts
	Caliper issue	Call your respective supplier (below)
Locking brakes	Loose, bent or broken parts	Replace defective parts
	Warped rotor	Turn or replace rotor
	Caliper	Rebuild or replace

Hydrastar (812) 655-4544 | DeeMaxx (801) 901-6732 | Kodiak (800) 756-3425

INDEPENDENT SUSPENSION SYSTEM 2.0

TROUBLESHOOTING, CONTINUED

WHAT TO INSPECT ON A SPINDLE

> Scratches or gouges (should be a smooth surface)

> Discoloration – if blue, it could be due to overheated bearing. If brown or black, it could be due to moisture. Use an Emery cloth to clean.

> Inspect the brake flange, ensuring the bolt holes are not wallowed.

BRAKE CONTROL SETUP

After our install, the first time you are connected to your trailer, set the power to 6 with no boost. Find a dry and level paved surface and get up to 25mph and fully apply the manual knob. If your brakes LOCK UP, turn down the power. If your braking wasn't sufficient, turn up the power. Repeat this process until you get to a comfortable point with the power, or just before the brakes lock up. The main idea is comfort of the driver with the trailer and that the trailer should NOT stop your truck.

WARRANTY INQUIRIES

For further information or for questions regarding our product Warranties, please contact MORryde directly for service at **574-293-1581** or by emailing **parts@morryde.com**.

LIMITED WARRANTY

For more information regarding our Limited Warranty, please visit **MORryde.com/product-warranty** under **Suspension - Retail Owners.** Scan the QR code below for further details.

I.S. Limited Warranty

DeeMaxx Manual

DeeMaxx Warranty

INDEPENDENT SUSPENSION SYSTEM 2.0

At MORryde, we have a passion for solving problems. Whether we're fabricating custom solutions, modifying a commercial chassis, or creating our innovative products, we answer to a wide range of markets and deliver on a variety of needs. At MORryde, it's simply about doing MORE for our customers, and it doesn't stop at the sale. We stand behind our products, believing in quality first, service always. No matter the issue, we'll be the first to respond and the last to be satisfied. In short, we build better — together.

MORryde
Above. Beyond. Always.
574.293.1581
www.MORryde.com